Lofrans'®
WINDLASSES

DORADO
code: B.22.101
date: January 2001

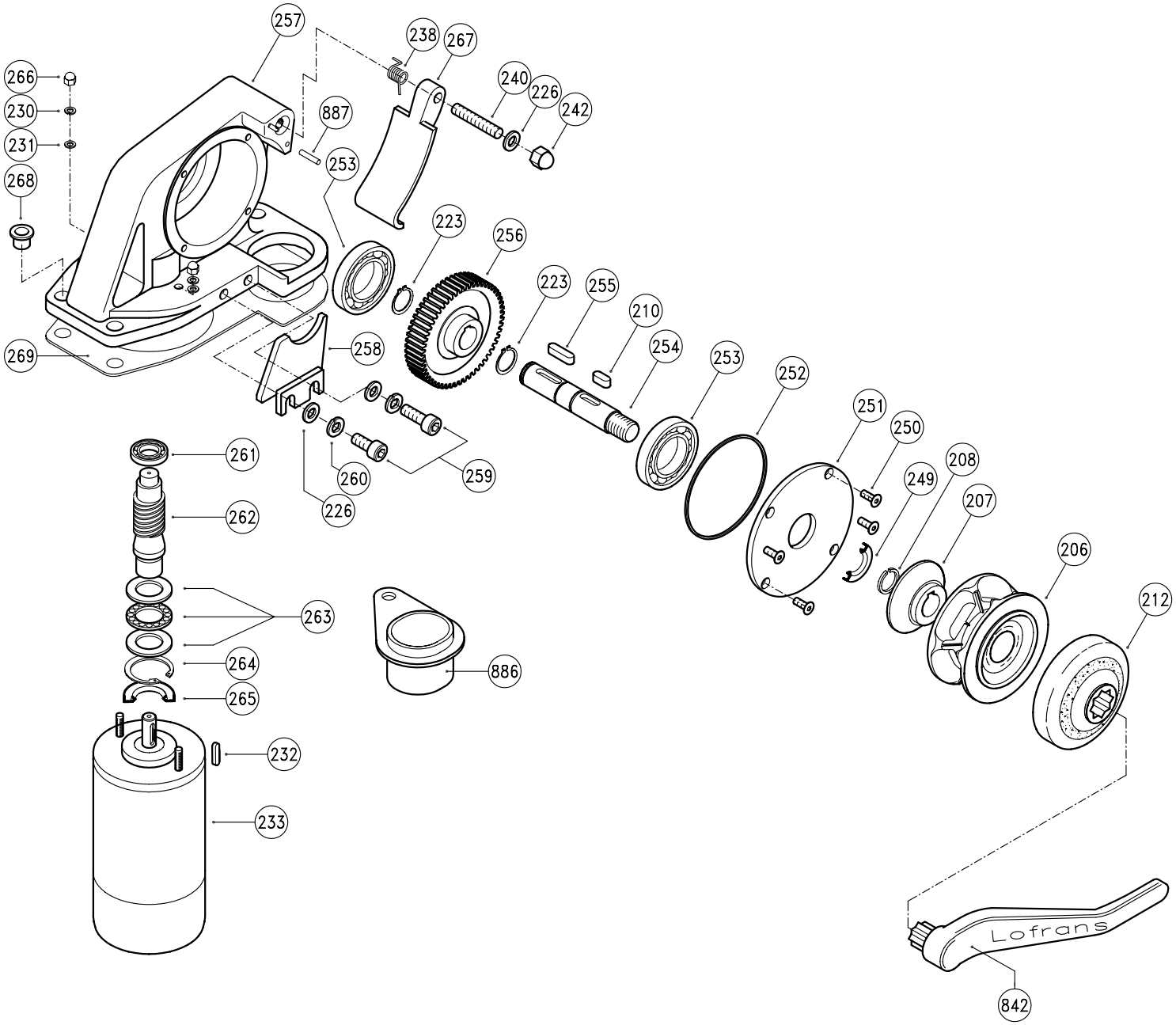

DORADO

Item	Description	Kit	Q.ty
206a	Gipsy chain 6 - 6 pockets		1
206e	Gipsy chain 8 - 5 pockets		1
206f	Gipsy chain 7 - 6 pockets		1
207	Clutch cone - inner		1
208	Ring		1
210	Key - 6x6x15	Kit C	1
212	Gipsy cap		1
223	Circlip - 18 Din 471	Kit D	2
226	Washer for M8 screw	Kit B	3
230	Spring washer for M5 screw	Kit B	2
231	Washer for M5 screw	Kit B	2
232	Key - 4x4x15	Kit C	1
233b	Electric motor 500W 12V M.P.		1
233c	Electric motor 700W 12V		1
238	Spring		1
240	Stud M8x45		1
242b	Cap nut self locking M8	Kit B	1
249	Seal - 18x28x7	Kit A	1
250	Hd cap screw - M5x8	Kit B	4
251	Cover		1
252	O Ring - 2325	Kit A	1
253	Bearing - 6006		2
254	Main shaft		1
255	Key - 6x6x25	Kit C	1
256	Wormwheel		1
257	Body		1
258	Stripper		1
259	Hd cap screw - M8x16	Kit B	2
260	Spring washer M8	Kit B	2
261	Bearing - 6001		1
262	Worm		1
263	Thrust bearing - 51104		1
264	Circlip - 37 Din 472	Kit D	1
265	Seal - 20x37x7	Kit A	1
266	Cap nut M5	Kit B	2
267	Finger		1
268	Nylon bush		3
269	Gasket		1
842a	Handle		1
886	Chain pipe		1
887	Pin		1

Item	Description	Kit	Q.ty
KA22101	Kit A - Seals		1
KB22101	Kit B - Screw&Nuts		1
KC22101	Kit C - Keys		1
KD22101	Kit D - Circlips		1